Formosa Journal of Science and Technology (FJST)
Vol. 5, No. 10, 2026: 2703-2716

Design of a Portable Corn Sheller Based on a Rotating Shelling Cylinder and Pulley–V-Belt Transmission for Small Scale Farmer Groups

Jandri Fan HT Saragi[1*], Eka Putra Dairi Boangmanalu[2], Sahat[3], Positron Bangun[4], Suadi[5], Zumhari[6]
[12345]Mechanical Engineering Study Program, Politeknik Negeri Medan
[6]Electrical Engineering Study Program, Politeknik Negeri Medan
Corresponding Author: Jandri Fan HT Saragi, jandrisaragi@polmed.ac.id

A R T I C L E I N F O

Keywords: Corn Sheller, Portable Machine, Shelling Cylinder, Pulley–V-Belt, Agricultural Mechanization.

Received : 17, August
Revised : 19, September
Accepted : 25, October

©2026 Saragi, Boangmanalu, Sahat, Bangun, Suadi, Zumhari: This is an open-access article distributed under the termsof the Creative Commons Atribusi 4.0 Internasional.

A B S T R A C T

Small-scale farmer groups require postharvest machinery that not only provides adequate shelling performance but is also simple, movable, and easy to operate. This study aimed to design and fabricate a portable corn sheller based on a rotating shelling cylinder and pulley–V-belt transmission. The research involved user-needs identification, design specification, component design, material and power-source selection, fabrication, assembly, and functional validation. The machine was designed with overall dimensions of approximately 1,500 × 850 × 1,250 mm and powered by a gasoline engine. The main components consisted of a hopper, shelling cylinder, shelling fins, outlets, frame, transmission system, sieve, and wheels. Functional validation showed that the prototype operated at approximately 1,050 rpm and performed the intended shelling function. The design demonstrates the applicability of a simple and movable configuration for small-scale farmer groups

ISSN-E: 2964-6804
DOI: https://doi.org/10.55927/fjst.v5i10.6
https://fjstformosa.my.id/index.php/fjst/index

INTRODUCTION

Corn (Zea mays L.) is an important agricultural commodity used for food, animal feed, and industrial raw materials. Effective postharvest handling is required to maintain product quality and reduce processing losses. Shelling is one of the important postharvest operations because corn kernels must be separated from the cob before storage, transportation, and marketing. At the farmer level, shelling may still be performed manually, resulting in relatively low working capacity and high labor requirements (Lestari, 2021; Purwono et al., 2023).

The use of shelling machines can reduce the dependence on manual labor and shorten processing time. Several studies have therefore developed corn shelling machines using different mechanical configurations and power sources. Jaenudin et al. (2022) developed an automatically controlled corn sheller, while Parekke et al. (2023) developed a corn sheller driven by an internal combustion engine. Purwono et al. (2023) investigated the design and performance of a portable corn sheller with medium capacity. These studies demonstrate the potential of mechanical shelling technology but also indicate differences in machine configuration, capacity, size, and portability.

Design approaches have also been applied to improve the systematic development of corn shellers. Bunganaen et al. (2022) applied the VDI 2222 method in the design of a corn shelling machine, emphasizing a systematic engineering-design approach. Chandrahadinata et al. (2025) subsequently applied the VDI 2221 method to develop a corn sheller emphasizing economical, safe, and efficient design.

Other studies have investigated alternative power and transmission configurations. Agustinus and Susilowati (2024) developed a corn sheller powered by solar energy, while Utomo et al. (2023) developed a corn sheller using a gasoline engine and a geared shaft. Nizar and Rahmatulloh (2025) specifically investigated the transmission system of a high-capacity corn sheller driven by a diesel engine. These studies indicate that the power-transmission system is an important element in determining the configuration and functionality of agricultural machinery.

Although previous studies have addressed machine capacity, power sources, systematic design methods, and portable configurations, there remains a need for a machine configuration that integrates a relatively simple shelling mechanism, gasoline-engine drive, pulley–V-belt transmission, and wheeled structure specifically oriented toward small-scale farmer groups. The research report identifies simplicity of construction, mobility, ease of operation, and suitability for small-scale users as important design considerations.

The present study therefore focuses on the engineering design and integration of the machine components, rather than repeating the performance comparison presented in the previous article. The design includes the rotating shelling cylinder, shelling elements, transmission, shaft, frame, hopper, outlets, sieve, and wheels.

The objective of this study was to design and fabricate a portable corn sheller based on a rotating shelling cylinder and pulley–V-belt transmission

through component selection, structural design, fabrication, assembly, and functional validation for small-scale farmer groups.

THEORETICAL REVIEW

Corn Shelling Machine

A corn shelling machine mechanically separates kernels from the cob by applying forces generated through a rotating or reciprocating mechanism. Machine configuration influences shelling capacity, shelling effectiveness, kernel damage, and ease of operation.

Previous research has demonstrated different approaches to corn sheller development. Jaenudin et al. (2022) developed an automatically controlled shelling machine, while Parekke et al. (2023) developed a gasoline-engine-driven machine with a capacity of up to 180 kg/h. Purwono et al. (2023) focused specifically on a portable machine configuration.

These studies provide a basis for developing a machine that balances processing capability and physical mobility.

Engineering Design of Corn Shellers

Engineering design methods provide a systematic framework for converting user requirements into machine configurations. Bunganaen et al. (2022) used the VDI 2222 method in developing a corn sheller, while Chandrahadinata et al. (2025) used VDI 2221 to develop a machine emphasizing economic, safety, and efficiency considerations.

The present research adopts the general engineering-design principle of identifying user needs, determining functional requirements, selecting components, developing the machine configuration, and validating the resulting prototype. The study does not claim to implement VDI 2221 or VDI 2222 as a formal design methodology.

Rotating Shelling Cylinder

The shelling cylinder is the principal working component responsible for separating kernels from the cob. A rotating cylinder generates mechanical interaction between the shelling elements and the cob surface.

The cylinder configuration must provide sufficient mechanical action to separate kernels while avoiding excessive damage. Therefore, the design should consider the rotational speed, shelling-element configuration, working space, and material flow. In the present machine, the shelling cylinder is equipped with shelling fins and mounted on a shaft that receives power from the transmission system.

Pulley–V-Belt Transmission

The transmission system transfers mechanical power from the prime mover to the shelling-cylinder shaft. A pulley–V-belt configuration is suitable for relatively simple agricultural machinery because its components are readily available and can be maintained or replaced without complicated procedures.

The theoretical relationship between pulley diameter and rotational speed is expressed as:

$$N_1D_1=N_2D_2 \text{..... (1)}$$

where N1 and N2 are the rotational speeds of the driving and driven pulleys, respectively, and D1 and D2 are the corresponding pulley diameters.

Transmission-system design is an important part of agricultural-machine development because the transmission determines how the power and rotational speed of the prime mover are delivered to the working mechanism (Nizar & Rahmatulloh, 2025).

Shaft Design

The shaft transfers torque from the transmission system to the rotating shelling cylinder. Shaft strength therefore needs to be considered during machine design.

The torsional shear stress can be estimated using:

$$L = 2C + 1.57(D + d) + \frac{(D - d)^2}{4C} \text{..... (2)}$$

where L is the torsional shear stress, C is torque, and D is shaft diameter. In the developed prototype, the shelling shaft uses a 50-mm-diameter steel shaft according to the material specification in the research report.

Prime Mover

The prime mover provides the energy required to operate the shelling mechanism. Both electric motors and gasoline engines can be applied to agricultural machinery depending on the operating environment. The present research uses a gasoline engine because the machine is intended to operate in agricultural locations where electrical infrastructure may not always be readily available.

The mechanical relationship between power, rotational speed, and torque is expressed as:

$$\tau = \frac{16T}{\pi d^3} \text{..... (3)}$$

where τ is power, T is rotational speed, and d is torque.

METHODOLOGY

Research Location and Object

The design, fabrication, assembly, and functional testing were conducted at the Mechanical Engineering Laboratory and Workshop of Politeknik Negeri Medan. User-needs observation was conducted at the "Mborgang" Farmer

Group, Boangmanalu Village, Salak District, Pakpak Bharat Regency, North Sumatra, Indonesia.

The research object was a portable corn sheller consisting of a rotating shelling cylinder, gasoline engine, pulley–V-belt transmission, frame, hopper, outlets, sieve, and wheels.

Design Procedure

The design and fabrication procedure consisted of:

1. identification of user requirements;
2. determination of design specifications;
3. development of the machine configuration;
4. selection of materials and components;
5. design of the shelling cylinder;
6. design of the transmission and shaft;
7. frame and hopper fabrication;
8. assembly of the machine;
9. functional validation; and
10. evaluation of the resulting configuration.

This procedure was based on the actual research workflow documented in the research report, including literature study, field observation, design, prototype fabrication, assembly, testing, and data analysis.

Design Requirements

The main requirements were:

1. suitable for small-scale farmer groups;
2. simple mechanical construction;
3. gasoline-engine operation;
4. rotating-cylinder shelling mechanism;
5. pulley–V-belt power transmission;
6. integrated output channels;
7. relatively compact construction;
8. and wheels to support machine mobility.

These requirements correspond to the research objective of developing a portable machine that is easier to move and operate in agricultural environments.

Main Design Specifications

Table 1. Main specifications of the portable corn sheller

Parameter	Specification
Machine type	Portable corn sheller
Shelling mechanism	Rotating shelling cylinder
Prime mover	Gasoline engine
Engine power	5 HP
Transmission	Pulley–V-belt
Shelling shaft	Ø50 mm

Parameter	Specification
Frame	50 × 50 × 2 mm hollow steel
Hopper/casing	2.6 mm steel plate
Wheels	Four 3-inch trolley wheels
Bearing	20 mm shaft bearing
Overall dimensions	Approximately 1,500 × 850 × 1,250 mm

The specifications are based on the actual component and material list in the research report.

Machine Configuration

The portable corn sheller was designed by integrating the feeding, shelling, transmission, structural, separation, and mobility systems into a single compact unit. The main components consist of a hopper, rotating shelling cylinder, shelling fins, seed outlet, cob outlet, frame, gasoline engine, pulley–V-belt transmission, wheels, and sieve/separator. The overall configuration of the machine is shown in Figure 1. These components were arranged to provide a compact configuration suitable for operation and movement within small-scale agricultural environments.



1. Hopper (feed inlet)
2. Shelling cylinder
3. Rubber shelling fins
4. Corn kernel outlet (primary outlet)
5. Cob outlet (secondary outlet)
6. Frame
7. Gasoline engine
8. Pulley–V-belt transmission system
9. Wheels
10. Sieve/separator

Figure 1. Overall design of the portable corn sheller.

The machine frame functions as the main supporting structure for the shelling unit, prime mover, transmission components, and hopper. A gasoline engine is used as the prime mover, while the rotating shelling cylinder performs the mechanical separation of kernels from the cobs. The shelling products are subsequently directed toward separate outlets, while the sieve/separator assists in separating kernels from residual material.

The overall dimensions of the machine were approximately 1,500 mm in length, 850 mm in width, and 1,250 mm in height. These dimensions were selected to maintain a relatively compact machine configuration while providing sufficient space for the shelling mechanism, transmission system, and operator access. The orthographic views and principal dimensions of the machine are presented in Figure 2.

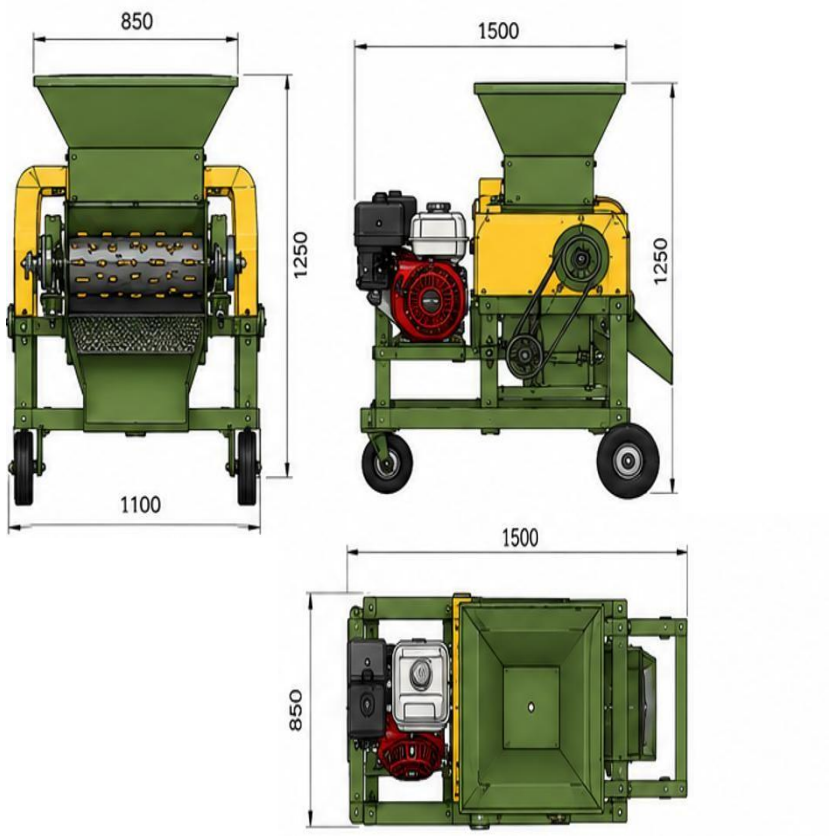

Figure 2. Orthographic views and overall dimensions of the portable corn sheller.

The design also incorporates four 3-inch trolley wheels to facilitate movement of the machine. However, the present study evaluates portability primarily from the design and functional perspectives; quantitative ergonomic assessment, such as pushing force, maneuverability, and mobilization time, was not included in the present validation.

Operating Principle

The operating principle of the portable corn sheller is based on mechanical separation between the corn cobs and kernels through the rotation of a shelling cylinder. Corn cobs are introduced through the hopper and directed toward the rotating shelling cylinder. The shelling fins mounted on the cylinder provide mechanical contact with the corn cobs, causing the kernels to detach from the cob.

The shelling cylinder is driven by a gasoline engine through the pulley–V-belt transmission system. The transmission transfers rotational power from the engine to the shelling mechanism while allowing the machine configuration to remain relatively simple and accessible for maintenance.

After the shelling process, the separated kernels and residual cob material are directed toward their respective outlets. The sieve/separator assists in separating the kernels from remaining shelling residues before the kernels leave the machine through the product outlet.

This configuration was selected because it combines a relatively simple shelling mechanism with a gasoline-powered drive system and a mobile frame, making it suitable for small-scale agricultural applications.

Transmission Design

The transmission was designed to transfer power from the gasoline engine to the shelling-cylinder shaft. The pulley–V-belt system was selected because it provides a relatively simple mechanical configuration.

Pulley diameter and rotational speed were considered according to Equation (1). The transmission components were positioned on the frame and aligned to maintain proper belt operation.

The design approach is consistent with the importance of transmission configuration in agricultural machinery, as discussed by Nizar and Rahmatulloh (2025).

Fabrication and Assembly

Fabrication consisted of cutting and forming the steel materials, welding the frame, producing the hopper and casing, preparing the shaft and shelling cylinder, installing bearings, mounting the gasoline engine, installing the transmission components, and attaching the wheels.

The component specifications included a 5 HP gasoline engine, 50-mm shaft, 50 × 50 × 2 mm hollow-steel frame, 2.6-mm steel plate, 3-inch trolley wheels, and 20-mm shaft bearings.

Functional Validation

The fabrication process followed the design configuration established during the engineering design stage. The main activities included material preparation, frame fabrication, hopper and casing fabrication, shelling cylinder fabrication, installation of the shelling fins, shaft installation, transmission assembly, engine installation, wheel installation, and final assembly.

The frame was fabricated using 50 × 50 × 2 mm hollow steel, while the hopper and casing used 2.6 mm steel plate. The machine was equipped with four 3-inch trolley wheels to support mobility. A 5 HP gasoline engine was used as the prime mover. Template_Laporan Akhir_PTI DIPA…

After assembly, the alignment of the shaft, pulleys, and transmission components was checked before functional testing. The assembly stage was intended to ensure that the rotating components could operate without excessive interference and that the material flow from the hopper to the product and cob outlets was maintained.

RESEARCH RESULTS

Resulting Machine Configuration

The design was successfully realized as a functional prototype integrating the shelling, power, transmission, structural, and mobility systems. The resulting machine has a compact configuration with a hopper positioned at the material inlet, the shelling cylinder located in the main working chamber, output channels for kernels and cobs, the engine and transmission mounted on the frame, and

wheels positioned underneath the structure. The overall dimensions are approximately **1,500 × 850 × 1,250 mm**.

Shelling System

The shelling system consists of a hopper, rotating cylinder, shelling fins, shelling chamber, and sieve. The rotating cylinder is the principal working element. The shelling fins provide mechanical contact with the cob during rotation. The configuration was designed to provide sufficient contact between the rotating mechanism and the incoming corn while allowing the separated material to flow toward the output system.

Structural System

The structural frame uses 50 × 50 × 2 mm hollow steel. The frame provides support for the shelling chamber, gasoline engine, transmission, and other components. The hopper and output channels use 2.6-mm steel plate. This configuration provides a relatively straightforward fabrication approach using materials commonly available in mechanical workshops.

Transmission and Power System

The power system consists of a 5 HP gasoline engine connected to the mechanical transmission. The transmission uses pulleys and V-belts to transfer rotational power to the shelling system. The use of a gasoline engine supports operation in agricultural environments where electrical power may not be continuously available. The transmission configuration also provides a relatively accessible arrangement for inspection and maintenance.

Mobility System

Four 3-inch trolley wheels were installed underneath the frame. Their inclusion is intended to facilitate movement of the machine between operating locations. The use of wheels is an important design characteristic distinguishing the prototype from a purely stationary shelling machine. Nevertheless, the present study does not quantitatively establish portability through measurements of pushing force, mobilization time, or field movement performance. Such measurements are identified as future research requirements in the research report.

Functional Validation

The prototype was tested five times using 200 kg of corn per test. The average results are shown in Table 2.

Table 2. Functional validation of the prototype

Parameter	Average result
Material mass per test	200 kg
Cylinder rotational speed	1,050 rpm
Processing time	20.06 min

Parameter	Average result
Shelling capacity	598.34 kg/h
Shelling success	98.89%
Kernel damage	1.59%
Shelling efficiency	83.25%

The prototype operated at an average cylinder speed of approximately 1,050 rpm and successfully performed the shelling process. The result is interpreted as functional validation of the developed configuration. It is not used to claim that 1,050 rpm is the optimum speed because the research did not experimentally investigate multiple rotational-speed levels. The research report specifically recommends testing several cylinder speeds in future research.

DISCUSSION

This part allows you to elaborate on your results findings academically. You must not put numbers related to your statistical tests here; instead, you have to explain that numbers here. You have to compile your discussion with academic supports to your study and a good explanation according to the specific area you are investigating.

Design Approach for Small-Scale Farmer Groups

The machine was designed around the practical requirements of small-scale agricultural users. Previous studies have demonstrated various shelling mechanisms, including automatic systems, gasoline-engine-driven machines, and portable machines (Jaenudin et al., 2022; Parekke et al., 2023; Purwono et al., 2023).

The present design combines several characteristics into a single configuration: a rotating shelling cylinder, gasoline engine, pulley–V-belt transmission, relatively compact frame, and wheels.

This combination is intended to provide a balance between functional shelling and physical mobility. The design therefore emphasizes integration and simplicity rather than the development of a highly complex shelling mechanism.

Shelling Cylinder as the Main Working Mechanism

The rotating cylinder is the central component of the machine because it directly interacts with the corn cobs. The use of shelling fins provides the mechanical interface required to transfer force to the cobs.

The design principle is consistent with the general development of mechanical corn shellers in previous studies, although the specific geometry and configuration of the present prototype were developed according to the requirements of the target farmer group. The functional validation confirms that the cylinder configuration can perform the intended shelling operation.

Transmission Configuration

The transmission is an important part of the overall machine architecture because it determines how the power generated by the gasoline engine reaches

the shelling cylinder. Nizar and Rahmatulloh (2025) demonstrated the importance of transmission-system design in high-capacity corn shelling machinery.

In the present machine, the pulley–V-belt configuration was selected as a relatively simple transmission approach. This is appropriate for a prototype intended for small-scale agricultural users because maintenance and component replacement can be performed without sophisticated equipment. However, the present study focuses on the design configuration and functional operation rather than optimization of transmission efficiency.

Structural Design and Portability

The physical configuration of the machine supports the portable concept through the combination of compact dimensions and wheels. The frame uses hollow steel, while the hopper and casing use steel plate. This combination provides a practical fabrication structure and allows the main components to be integrated into a single unit.

The term "portable" should nevertheless be interpreted carefully. The machine has been designed with wheels to facilitate movement, but quantitative ergonomic tests were not performed. Therefore, the present study establishes **design-based portability**, rather than experimentally proven ergonomic portability. The research report identifies pushing force, mobilization time, and movement on field surfaces as subjects for future testing.

Relationship to Previous Design Studies

Bunganaen et al. (2022) demonstrated the application of the VDI 2222 methodology in corn-sheller design, while Chandrahadinata et al. (2025) emphasized economical, safe, and efficient machine design using VDI 2221.

The present research differs in its specific design orientation. It does not claim to introduce a new formal design methodology. Instead, its contribution lies in the **configuration of a portable corn sheller that integrates a rotating cylinder, gasoline engine, pulley–V-belt transmission, and wheeled frame for small-scale farmer-group use**.

This distinction is important because the novelty of the work should not be overstated as a new shelling principle. The contribution is primarily an application-oriented engineering configuration.

Functional Validation of the Prototype

The functional validation produced an average capacity of 598.34 kg/h, shelling success of 98.89%, kernel damage of 1.59%, and shelling efficiency of 83.25%. These values demonstrate that the designed configuration can operate successfully under the tested conditions.

However, these values should be considered supporting evidence for the design rather than the central contribution of the article. The performance comparison against manual shelling belongs to the previous performance-oriented article. Keeping the performance data in this article as functional validation prevents unnecessary duplication between the two publications.

CONCLUSIONS AND RECOMMENDATIONS

A portable corn sheller based on a rotating shelling cylinder and pulley–V-belt transmission was successfully designed and fabricated for small-scale farmer-group applications.

The developed configuration integrates a hopper, rotating shelling cylinder, shelling fins, steel frame, gasoline engine, pulley–V-belt transmission, output channels, sieve, and wheels into a single machine. The prototype has overall dimensions of approximately 1,500 × 850 × 1,250 mm and uses a 5 HP gasoline engine.

Functional validation demonstrated that the prototype was able to perform the intended shelling operation at approximately 1,050 rpm, with an average capacity of 598.34 kg/h, shelling success of 98.89%, kernel damage of 1.59%, and shelling efficiency of 83.25%.

The resulting design provides a feasible configuration for integrating shelling functionality, mechanical simplicity, and physical mobility. Nevertheless, quantitative ergonomic portability and operating-cost evaluations remain necessary before the machine can be fully assessed for field deployment.

FURTHER STUDY

Future research should investigate several rotational speeds and working clearances to determine their effects on shelling capacity, shelling success, and kernel damage.

Variation in corn moisture content should also be investigated because material condition may influence the interaction between the corn cob and the shelling cylinder.

Quantitative portability evaluation should include pushing force, mobilization time, and movement performance under different field conditions. In addition, fuel consumption, operating cost per kilogram, and maintenance cost should be measured to provide a more complete economic evaluation.

Field testing involving the target farmer group is also recommended to assess machine performance under actual agricultural conditions and to obtain user feedback for further prototype refinement. These aspects are explicitly identified as future research directions in the research report.

ACKNOWLEDGMENT

The authors gratefully acknowledge Politeknik Negeri Medan for the financial support provided under Contract No. B/419/PL5/PT.01.05/2026, funded by the 2026 POLMED DIPA budget.

REFERENCES

Agustinus, N. T., & Susilowati, S. E. (2024). Rancang bangun mesin pemipil jagung menggunakan tenaga matahari/solar panel. Jurnal Kajian Teknik Mesin, 9(1), 1–7. https://doi.org/10.52447/jktm.v9i1.7684

Bunganaen, W., Toai, Y., & Mangesa, D. P. (2022). Rancang bangun mesin pemipil jagung dengan metode VDI 2222. LONTAR Jurnal Teknik Mesin Undana, 9(2), 53–59. https://doi.org/10.35508/ljtmu.v9i02.9322

Chandrahadinata, D., Taptajani, D. S., & Suherman, T. H. (2025). Perancangan mesin pemipil jagung ekonomis, aman dan efisien menggunakan metode VDI 2221 (Verein Deutscher Ingenieure). Jurnal Kalibrasi, 23(1), 19–29. https://doi.org/10.33364/kalibrasi/v.23-1.1567

Jaenudin, J., Faizal, F., Hendriko, & Khamdi, N. (2022). Design and fabrication of corn sheller equipped by sequential controller based automatic system. AGROTEKNIKA, 5, 49–59.

Lestari, S. (2021). Kinerja mesin pemipil jagung tipe pengumpan langsung (Performance of throw-in type corn sheller machine). Jurnal Penelitian Pertanian Terapan, 21(3), 262–269.

Nizar, A., & Rahmatulloh, N. (2025). Rancang bangun sistem transmisi mesin pemipil jagung kapasitas 1 ton/jam dengan penggerak diesel 7 HP. Prosiding SEMNAS INOTEK, 9, 2146–2154.

Parekke, S., Yantony, D., Tahir, A., & Padang, E. R. (2023). Rancang bangun mesin pemipil jagung kapasitas hingga 180 kg/jam dengan menggunakan motor bakar. Jurnal Ilmiah Teknik dan Ilmu Komputer, 2(1), 8–14.

Purwono, A. H., Jamaldi, A., Margono, B., Joharwan, J. W., Wiyono, A., & Ratna, D. (2023). Desain dan analisis performa mesin pemipil jagung portabel berkapasitas sedang. Jurnal Penelitian Pertanian Terapan, 23(2), 302–310.

Utomo, A. I., Gusniar, I. N., & Yulianty, E. (2023). Perancangan mesin pemipil jagung dengan poros gerigi berpenggerak gasoline engine. JURNAL Teknik Mesin, 16(1), 17–23.